TECHNICAL TOOLBOXES

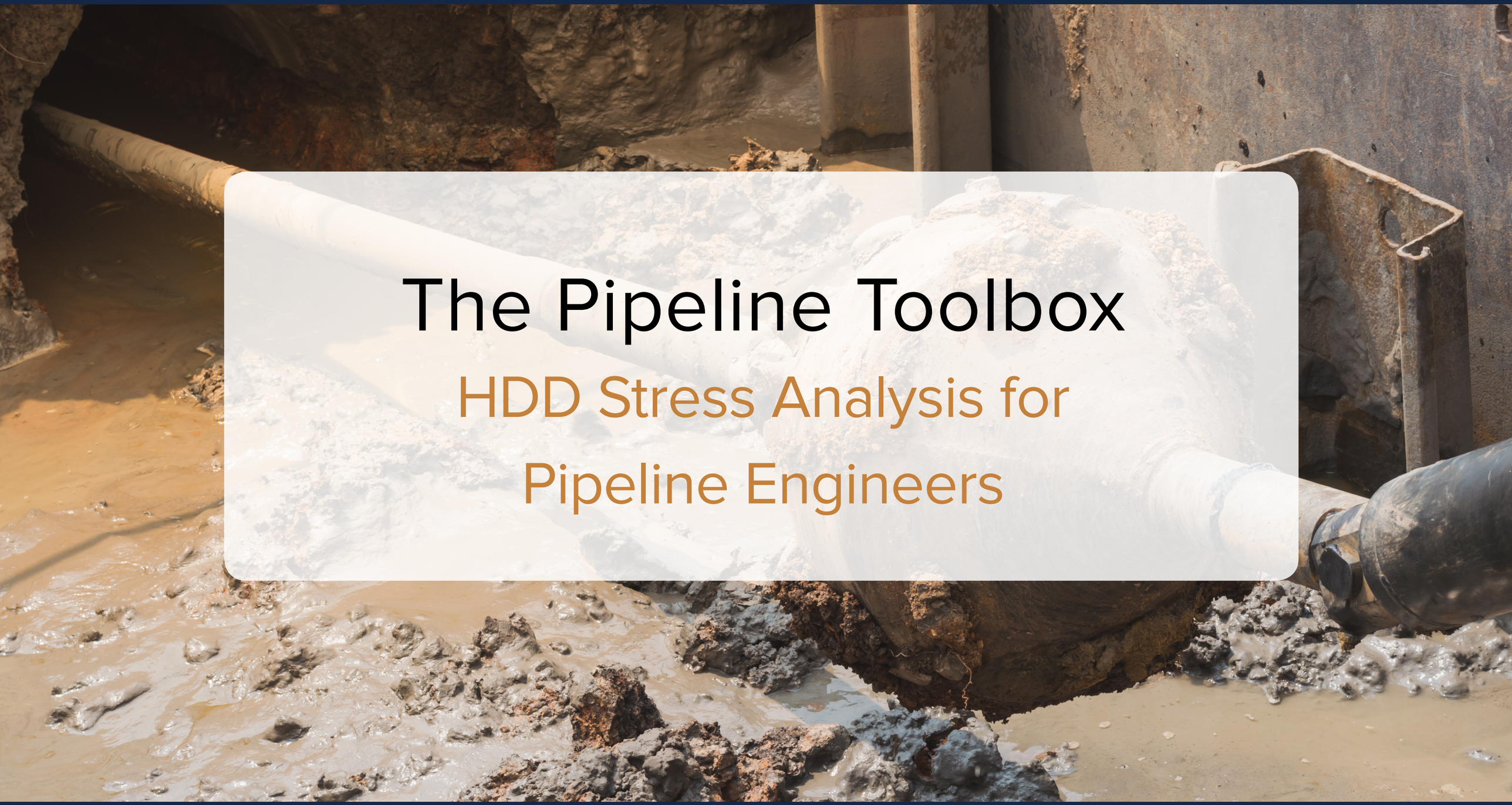

The Pipeline Toolbox

HDD Stress Analysis for Pipeline Engineers

Table of Contents

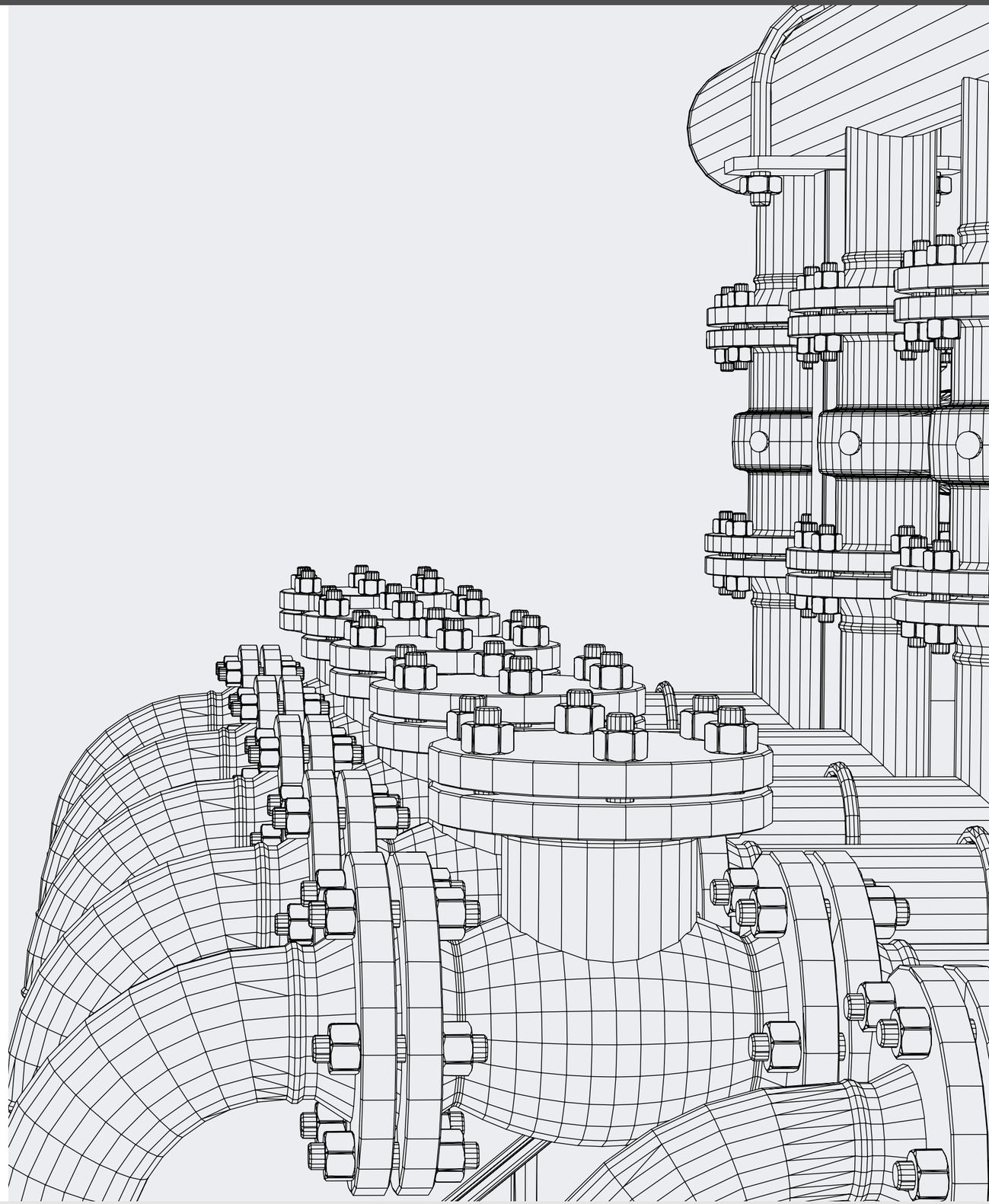

Overview

Whether you joined us for the live event or viewed the recording, thank you for participating in the HDD Stress Analysis Webinar for Pipeline Engineers. You can watch the recorded Webinar on the Technical Toolboxes website or our YouTube channel.

Technical Toolboxes created the Webinar and eBook in collaboration with our expert on the subject, David A. Willoughby. In the Webinar, Mr. Willoughby spoke in detail about the stresses and strains for steel pipelines in HDD design and construction. However, similar design principles apply in applications that call for plastic piping.

> “Determining the loads and stresses that the product pipe will experience as a result of installation by HDD is a critical process and a primary concern for the owners and engineers of the product pipeline system. ”

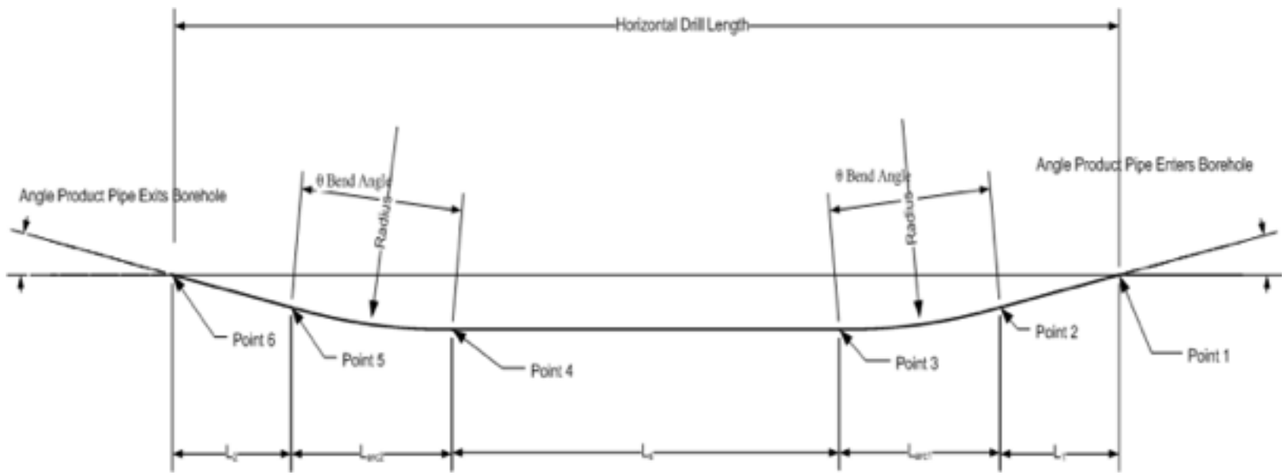

Figure 1 An example of a bore profile in the vertical and horizontal planes.

HDD Stress Analysis for Steel Pipelines

Steel products have a high pulling load capability and can handle considerable pullback loads. The allowable pulling loads for steel pipe are a function of the steel material grade, pipe diameter and wall thickness, and safety or code load factors.

The force pulling the pipe through the curves in the borehole causes bending loads. The pressure exerted by the drilling mud in the annulus around the pipe causes external loads (unless the pipe is flooded with a fluid at a similar pressure).

The stresses and loads resulting from the HDD installation method should be reviewed and analyzed in combination with the operating pressures to ensure that it does not exceed acceptable limits. Determining the loads and stresses that the product pipe will experience as a result of installation by HDD is a critical process and a primary concern for the owners and engineers of the product pipeline system. The owners and/or engineers must ensure that they provide the HDD contractor with a crossing design that is acceptable for the product pipe.

In 1995, the Pipeline Research Council International published a detailed manual, titled Installation of Pipelines by Horizontal Directional Drilling, an Engineering Design Guide (November 2008 version). This manual provides detailed information and methods for determining the estimated loads and stresses that a steel product pipeline may experience as a result of HDD installation. The Technical Toolbox HDD module utilizes many of the methods, procedures, and calculations provided in this manual.

Product pipe pull loads are calculated based on an analysis of the designed bore profile or the actual pilot hole. Figure 1 is an example of the vertical and horizontal planes of a bore profile, with horizontal pipe length along the x-axis and vertical distance from the reference line along line the y-axis. In the figure, the entire bore path is made up of straight and/or curved sections. The bore path should comprise the fewest number of sections possible.

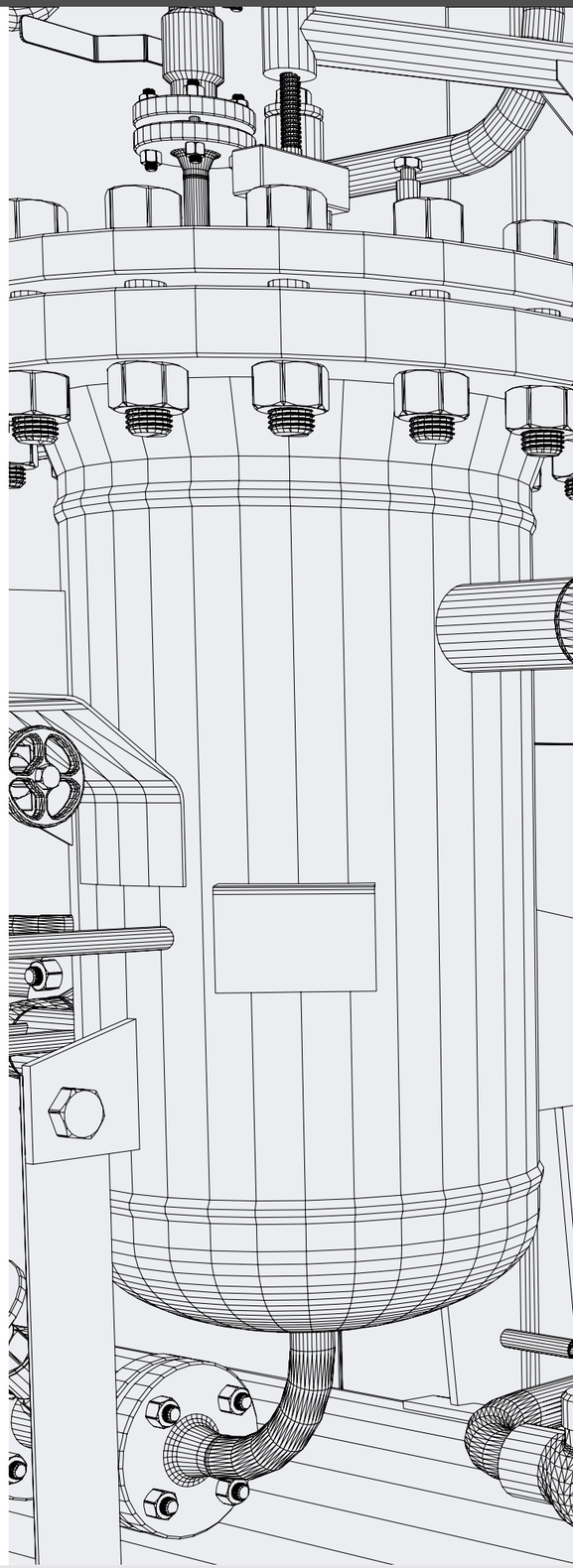

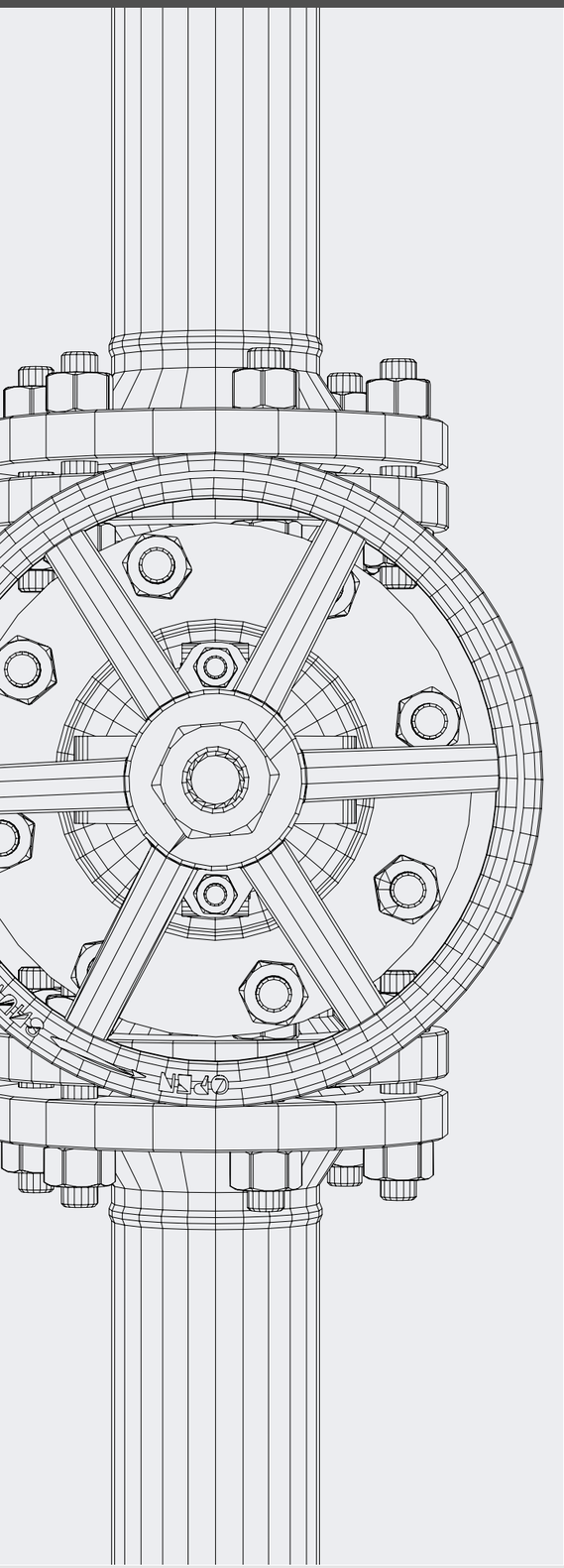

However, the design can include as many sections as necessary to define the crossing. The first step in calculating the estimated pulling loads is to develop the input data. It consists of the product pipe material properties, the drilling fluid properties, and any code design factors that are applicable.

The next step is to define the bore path for the crossing. The values to the variables are assigned based on the profile required to cross the obstacle while reaching the required depth successfully. The preliminary or first shot at determining the values is based on the definition of the obstacle, the subsurface conditions, and the material properties of the product pipe.

Using this data and the appropriate equations, the designer can develop a combination of straight lines and curves that will cross the obstacle at the desired depth within the available overall bore length.

After defining the input data and the bore path, the calculations begin with the straight section of pipe, assuming that the pipe is pulled from left to right (as viewed in figure 2).

The modeling and calculation process must be done from the pipe side to the rig side. As stated earlier, engineers usually assume that the load at point 1 is zero (see figure 1). When using this assumption, the first calculated load is at the end of the first straight section or point 2 (see figure 1).

Curved Sections

Each curved section is modeled with variables, as shown in figure 3. The estimated forces acting along the curved path of the pipeline add up as if acting in a straight line. The total force (or pulling load) required to pull the pipe through the borehole is the sum of the required force for all of the straight and curved sections in the pipeline.

The installation stresses experienced by product pipes are often the worst-case load events that the pipeline will experience over its life. As a result, the installation stresses often dictate the material properties of the product pipe.

Tensile stress on a circular pipe during HDD installation is assumed to distribute uniformly over the cross-section. The stress is determined by dividing the tension by the cross-sectional area. Maximum allowable tensile stress for steel pipe should be limited to 90% SMYS.

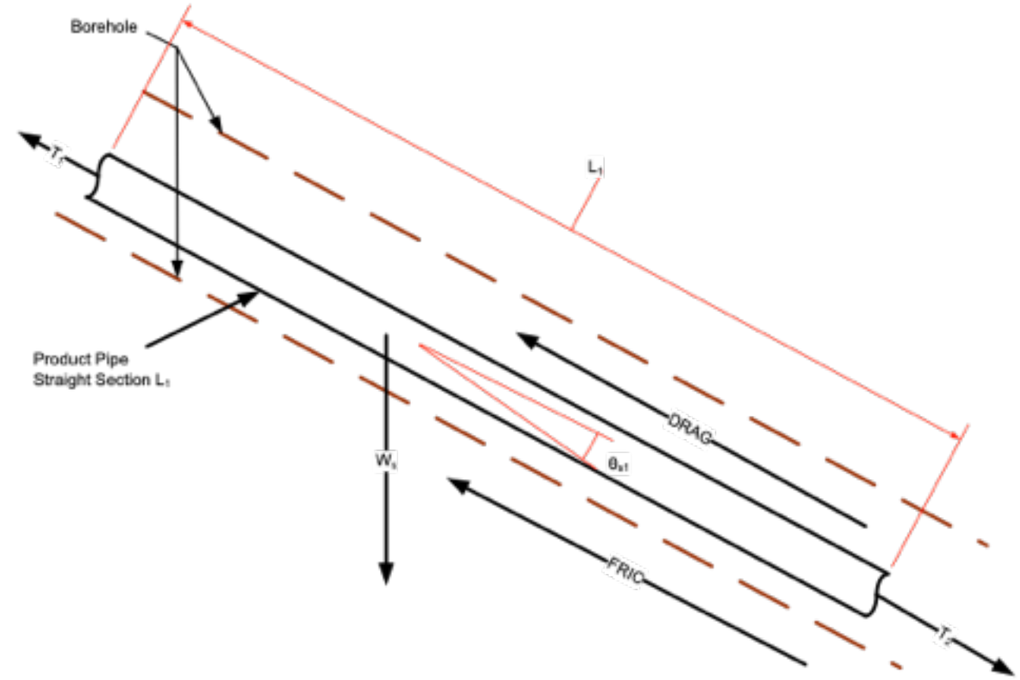

Figure 2 An example of a straight section of pipe, pulled from left to right.

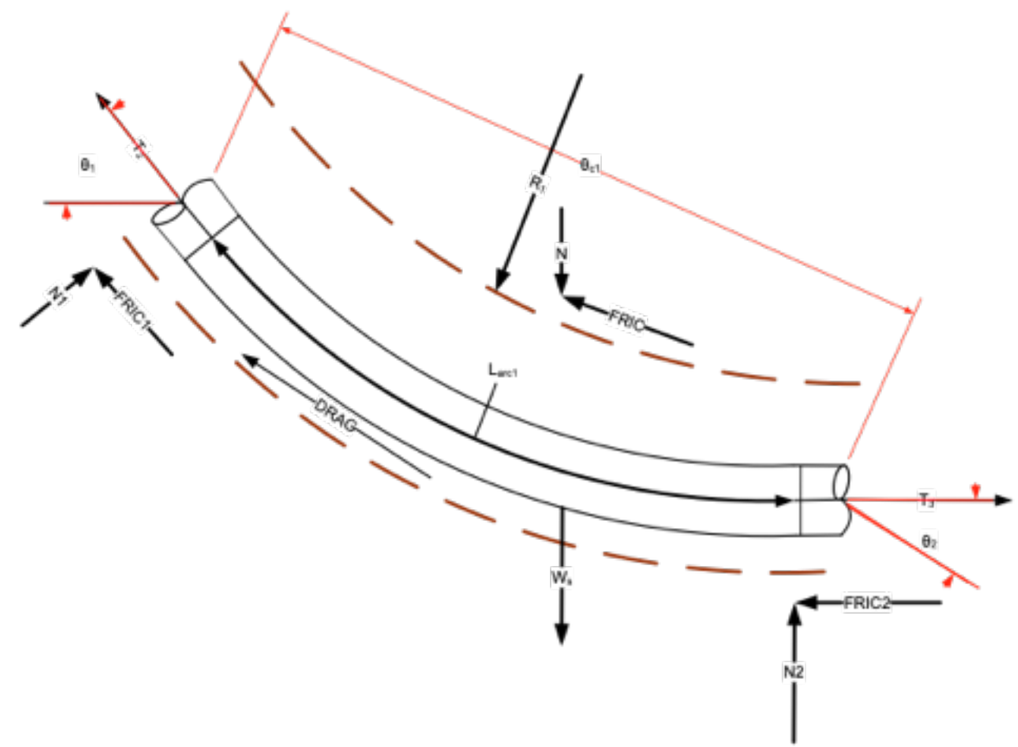

Figure 3 An example of a curved section of pipe.

During HDD installation, the worst-case stress condition converges at the point where the combination of tensile, bending, and hoop stresses occur at the same time. Generally, these are the areas of tight radius bends, high tension, which is usually closer to the drill rig, and high external pressure, which is usually at the deepest point.

Engineers must also consider the operating stresses once the pipeline is in service. The pipe bending stresses imposed by HDD construction is usually not excessive. However, the bending stresses should be checked in combination with other longitudinal and hoop stresses to ensure that they do not exceed the allowable stress limits. According to ASME/ANSI B31.4, the maximum shear stress in the pipeline should not exceed 45% of the SMYS of the pipe.

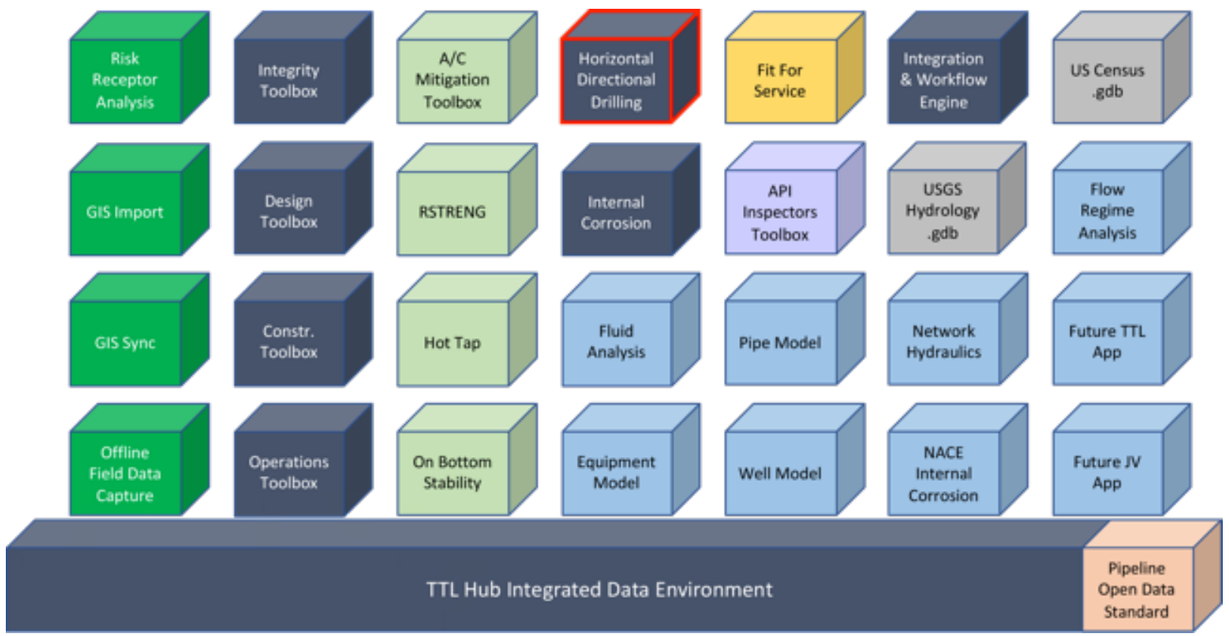

Figure 4 Integrated Data Applications within the HUBPL

Software and Training from Technical Toolboxes

The latest generation of software tools from Technical Toolboxes are part of the Pipeline Hub (HUBPL) Integrated Data Environment. We provide the calculation tools to perform analyses at all stages of the pipeline life cycle as part of the Pipeline Toolbox (PLTB).

With the release of v20, PLTB has become an essential part of the HUBPL. PLTB and the HUBPL bring together asset data, case histories, and pipeline network maps. This allows So engineers to spend less time chasing down information and more time designing solutions.

Additionally, Technical Toolboxes is an aAuthorized PRCI software reseller and has developed a range of PowerTools designed to maximize pipeline engineering productivity. Also, the company is at the hub of an intellectual property resource network. Technical Toolboxes is a thought leader and knowledge resource provider for pipeline engineers, with live and online training for Professional Development Hours (PDHs) and industry-leading instructors, like Mr. Willoughby.

Figure 4 shows the different sources of data that HUBPL brings together in one platform. The dark blue is IP developed within TTL. Other colors indicate data integrated from external sources, and gray shows public data and plugins.

The HUBPL draws this eclectic mix together as one integrated data environment using the Pipeline Open Data Standard. One of these is the HDD PowerTool.

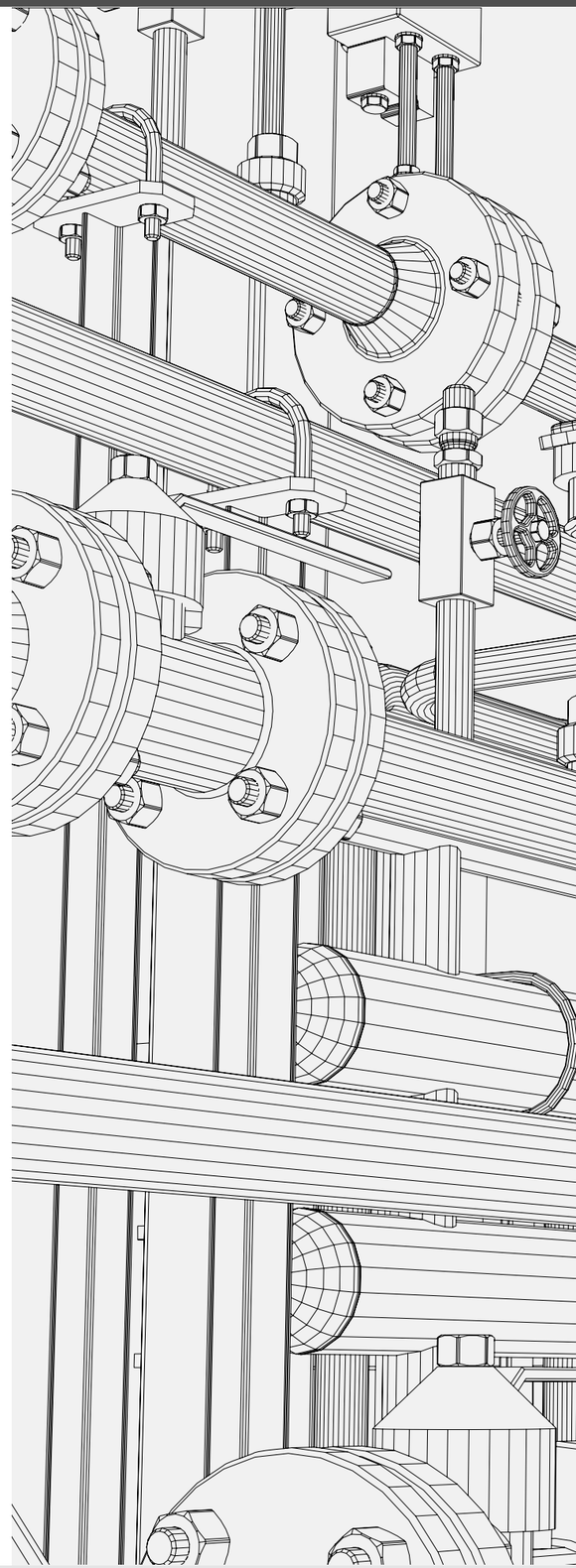

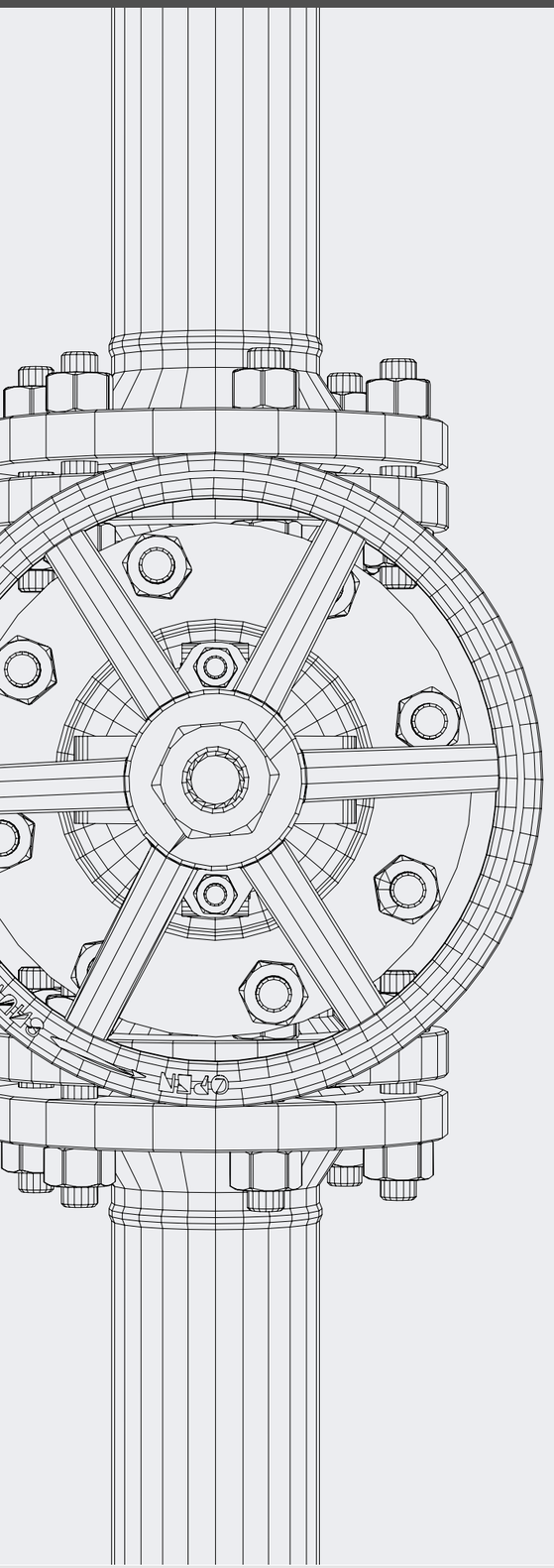

The Horizontal Directional Drilling PowerTool

Horizontal Directional Drilling is a complex pipeline engineering operation. The Horizontal Directional Drilling PowerTool (HDDPT) applies advanced industry knowledge to guide your team in the design, engineering, and installation phases of horizontal drilling. Using this innovative tool, pipeline engineers reduce costs, operational complexity, and construction risk.

- Maximize drilling efficiency and wellbore stability by identifying fluid characteristics and mud requirements — You'll get the job right on the first attempt, eliminating unnecessary costs and risks.
- Full control of borehole design and resulting forces on the pullback piping to maximize the pull load and eliminate failures during installation for steel and plastic pipe
- HDDPT allows for complex angle and bends, unlimited sectioning, and variable entrance and exit points
- Full ArcGIS overlay to map out your elevation profile and path of your wellbore
- Easier to put cables in conduits and determine jam ratios, clearance, tension by location, and sidewall pressures for successful and efficient cable installation
- HDDPT performs pull force and installation analysis for plastic pipe. It determines the maximum plastic pipe stresses to eliminate failure during pipe installation
- Improved borehole stability by enabling proper characterization of drilling fluids, soil properties via multi-point, multi point or single-point analysis, and hydraulic pressures — It ensures borehole stability and eliminates hydro-fracturing during drilling operations.
- Accurate pump sizing and rpm settings, to ensure borehole stability and efficient HDD operations with duplex and triplex pumps

"The Horizontal Directional Drilling PowerTool (HDDPT) applies advanced industry knowledge to guide your team in the design, engineering, and installation phases of horizontal drilling."

> “Gas is replacing coal, and the corresponding need for expanded pipelines implies more HDD projects.”

Looking Forward

Oil and gas companies keep moving and changing as gas replacing coal and uncertainty creates volatile prices. Gas is replacing coal, and the corresponding need for expanded pipelines implies more HDD projects.

Encroachment and competition for access to right-of-ways are likely to mean passing new pipes under other assets such as existing pipelines, roads, and train tracks, as well as rivers and other geographical features. So pipeline engineers with HDD expertise will continue to be in demand.

The midstream sector faces the challenge of losses due to COVID-19. While it’s sure to pass eventually, questions remain as to the shape of the post-pandemic world and what impact the changes will have on the industry.

The potential for market collapse means only the most efficient and productive players are likely to survive. Digital tools are essential components that will enable pipeline engineers to work most efficiently and productively. HDD is a skill set that will keep you ahead of the pack.

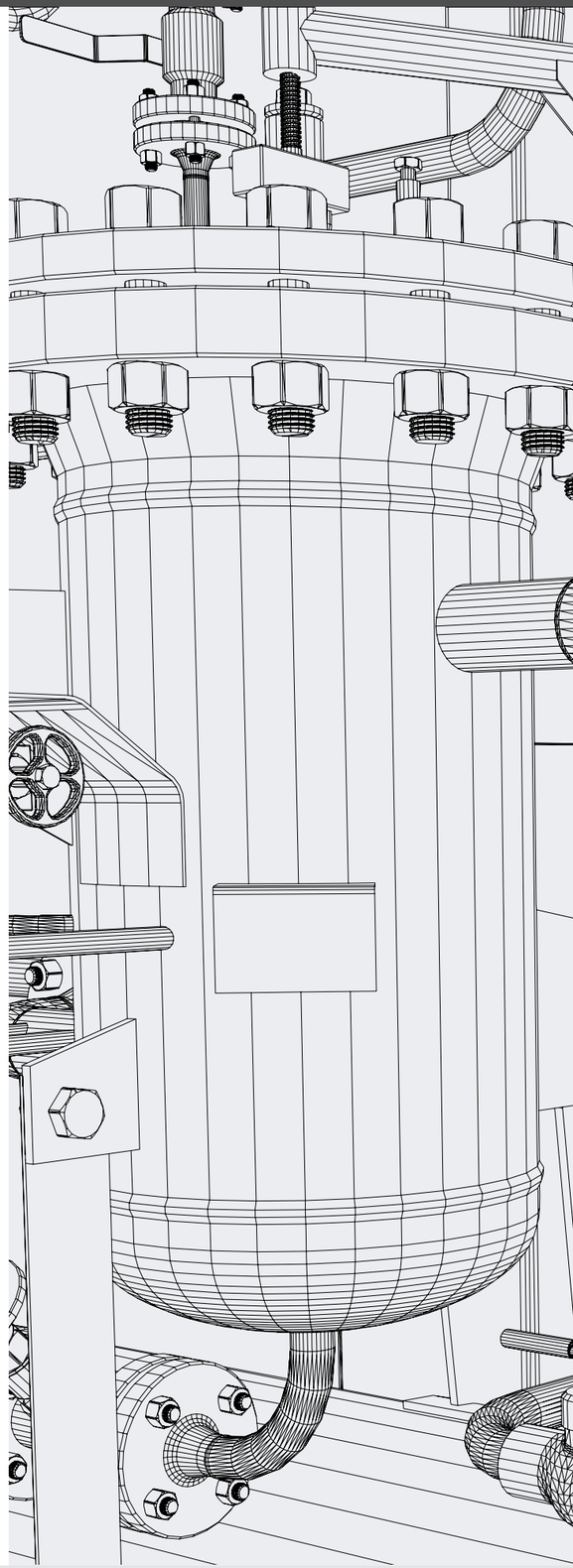

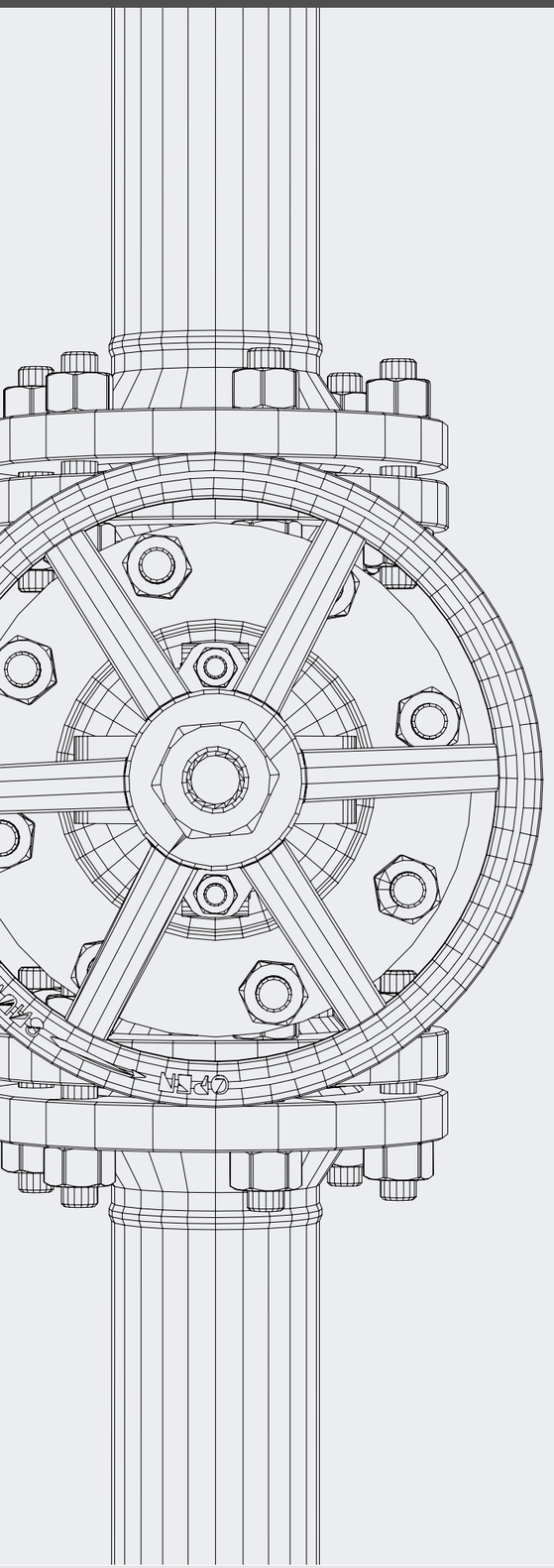

Your Next Step

- Request a demo for HDDPT, HUBPL, or Pipeline Toolbox to learn more or get a good insight into the benefits and capabilities of the software
- Register for a Technical Toolboxes training course or Webinar to learn about HDD and other professional skill sets to earn PDH credits
- Read about HDD solutions from Technical Toolboxes on the company website and download other information resources
- Contact us anytime with questions or send us your feedback

> “The potential for market collapse means only the most efficient and productive players are likely to survive.”

“The programs that [Dr. Zand] has developed have optimized mitigation and monitoring for pipelines subjected to a broad range of geohazard conditions.”

David A. Willoughby

Mr. Willoughby has 40 years of experience in engineering, pipeline design, corrosion control, and management in the petroleum and utilities pipeline industry. It includes working with gas transmission and distribution systems, petroleum facilities, and water/sewer pipelines from conception through design, construction and testing, economic evaluation, and project field supervision.

He has been responsible for the design, permitting, inspection, and construction administration of numerous horizontal directional drills (HDD) on pipeline projects. He is the author of several articles and two books published by McGraw-Hill, The Plastic Piping Handbook (2002), and Horizontal Directional Drilling (2005).

Mr. Willoughby provides HDD training to the pipeline and utility industries. He has presented at the engineering workshop at N.C. Utilities Commission Office of the Pipeline Safety Conference and the Southern Gas Association Annual Conference. Mr. Willoughby’s HDD training provides Professional Development Hours (PDH) for professional engineers in many states, including Texas.

Pipeline Cathodic Protection Experience

Mr. Willoughby has specializations in cathodic protection design, corrosion control, and AC interference analysis with extensive experience in the design, construction, and implementation of cathodic protection systems and AC mitigation methods. Mr. Willoughby is a NACE certified cathodic protection specialist.

During his career, Mr. Willoughby has gained significant experience and training in corrosion control and cathodic protection of multiple facilities. His primary areas of expertise include performing engineering feasibility studies, performing corrosion evaluations and assessments, AC modeling and mitigation, and recommendation and design of corrosion control measures for storage tanks and pipeline facilities.

Mr. Willoughby is an industry-recognized expert in AC interference modeling and mitigation. He has extensive experience utilizing the SES Right of Way, PRCI, and TTB PowerTool software packages. Mr. Willoughby also developed in-house computer programs for performing QA/QC reviews of all AC interference modeling and mitigation design projects. He provides AC interference and CP design training to the pipeline and utility industries. He has presented AC training to several key industry clients such as Enbridge, Kinder Morgan, and Phillips 66.

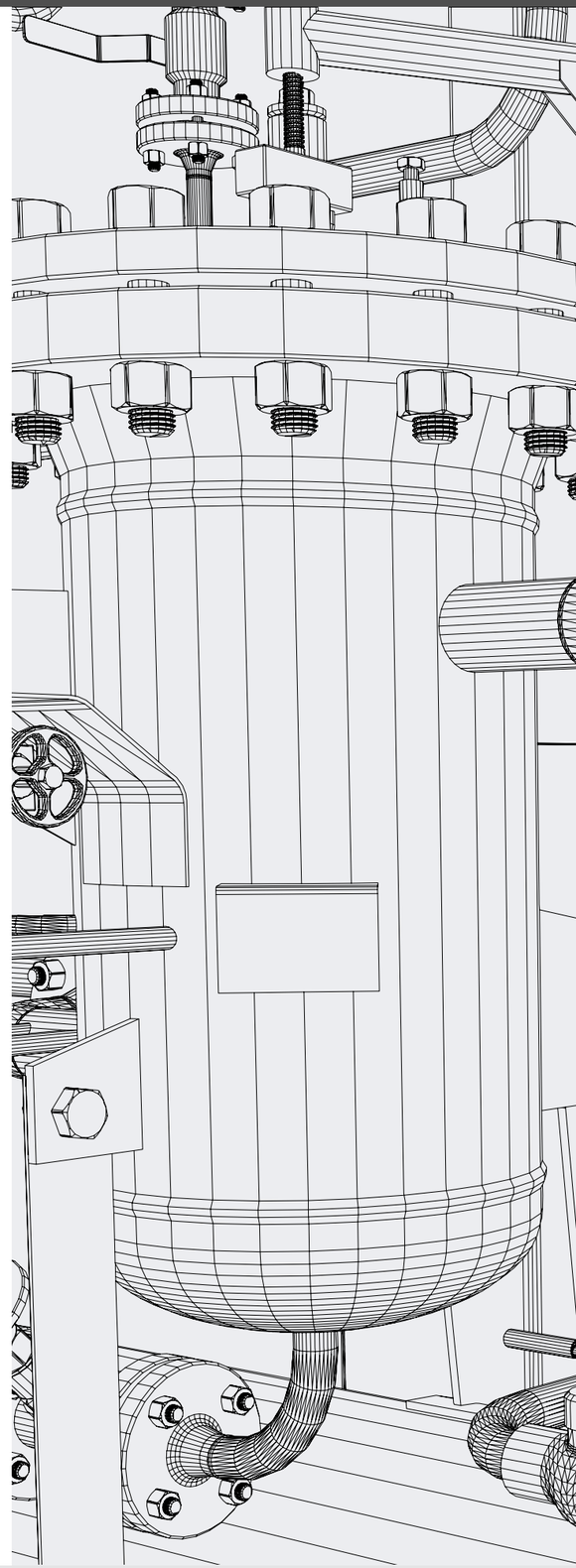

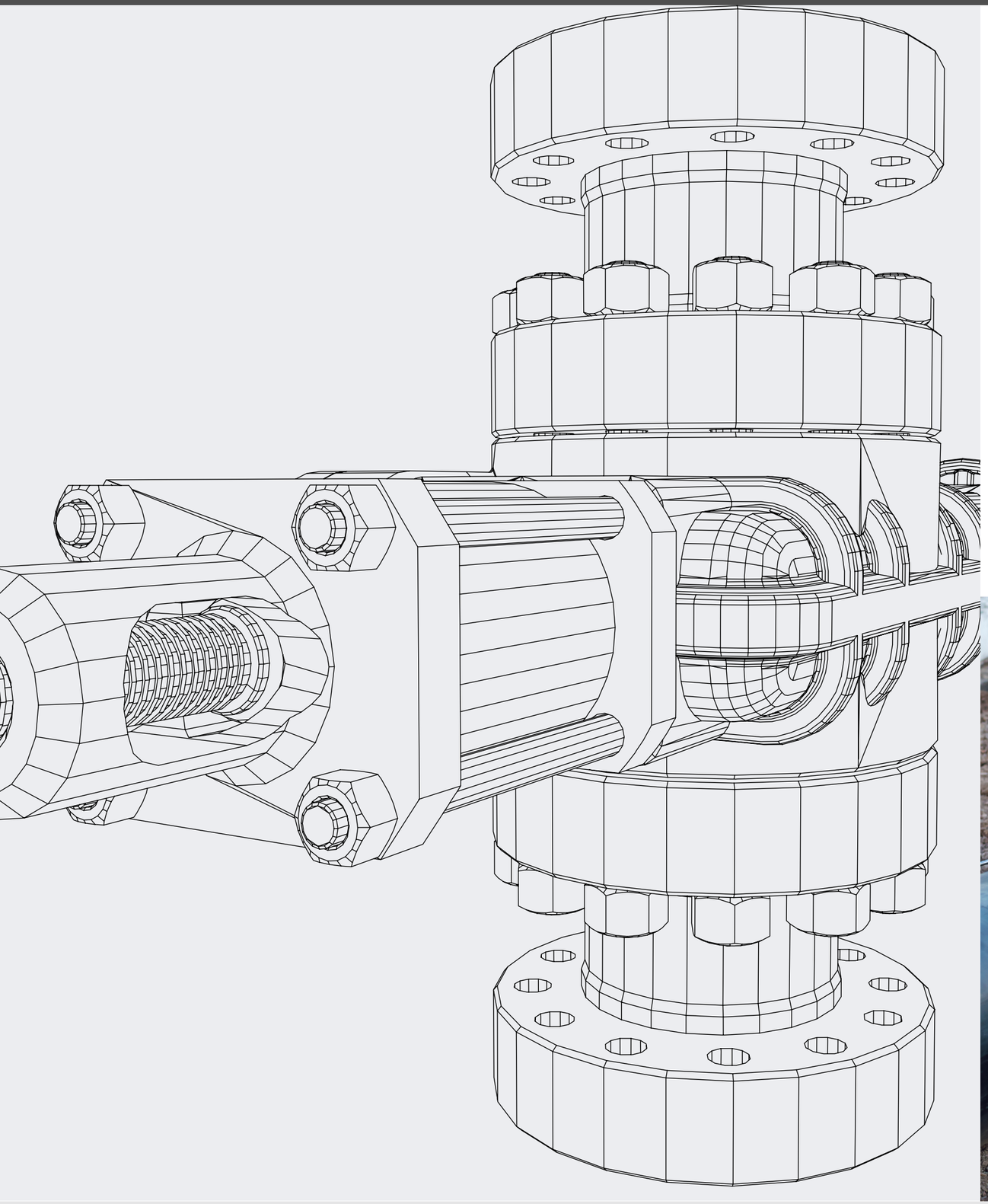

Technical Toolboxes
3801 Kirby Drive, Suite 520
Houston, TX 77098

Toll Free: (866) 866-6766
Phone: (713) 630-0505
Fax: (713) 630-0560

info@technicaltoolboxes.com
www.technicaltoolboxes.com

About Technical Toolboxes

Technical Toolboxes leads the mid-stream oil and gas industry with knowledge-based solutions. Our integrated desktop and cloud-based solutions foster engineering productivity and standardization. Professionals around the world look to our industry-recognized instructors for training and development. To improve efficiency, compliance, and productivity, pipeline engineers look to Technical Toolboxes.